Waterproof Wall Mount Door Holder

Model:YD-611IP

Introduction

1. The Factory default voltage is 12/24VDC Optional
   The door holders are designed for use with self-closing fire and smoke barrier doors and keep the fireproof door open.

2. The IP rating is IP68 and holding force is 150kg.It can be used in navigation, ships, and humid environments.

Specifications

- Size:97.5Lx75Wx40H(mm)
- Suction plate size:Φ74.5x41(mm)
- Operating Voltage: 12/24VDC Optional
- Operating Current: 0.13A
- Holding Force: 150kg
- Maximum Power:3W
- IP Rating:IP68
- Accessory : 16mm Waterproof connector
- Product Weight:1.66kg

Dimension

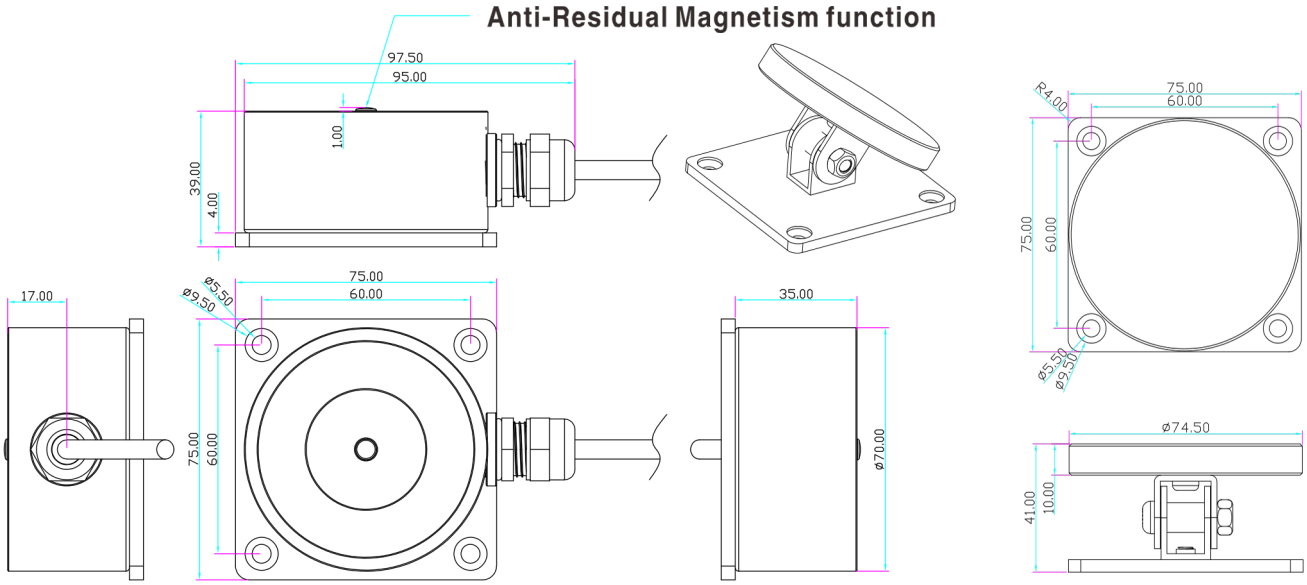

Installation

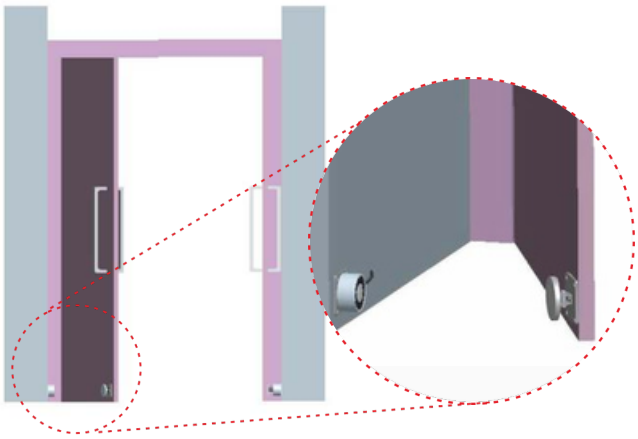

Wiring Instruction

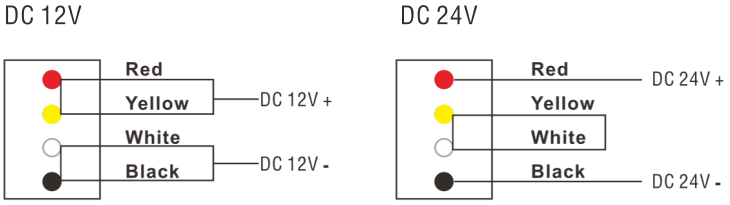

ASCENDO
85 Playfair Road, #06-02 Tong Yuan Industrial Building Singapore 368000
Tel: 6741 1218 Email: sales@ascendo.com.sg www.ascendo.com.sg