PRODUCT DATASHEET

ES-626

Siren Horn



Technical specifications

Housing	Black ABS plastic
Mounting bracket	Black iron, 1.5 mm thick
Rated voltage	24 V DC
Operating voltage	21–26 V DC
Rated current at 24 V DC	500–60 mA (as printed)
Sound pressure at 24 V DC	114 ± 3 dB

Dimension drawing

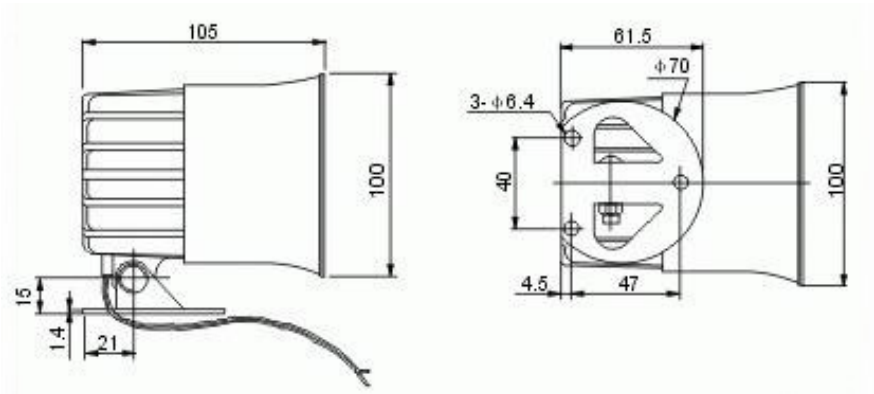

85 Playfair Road, #06-02 Tong Yuan Industrial Building Singapore 368000
Tele: 6741 1218 Email: sales@ascendo.com.sg
Website: www.ascendo.com.sg